VICOM Elegance 12'' Spezifikation Wandmontage
VICOM Elegance 12'' Specification with wall mount

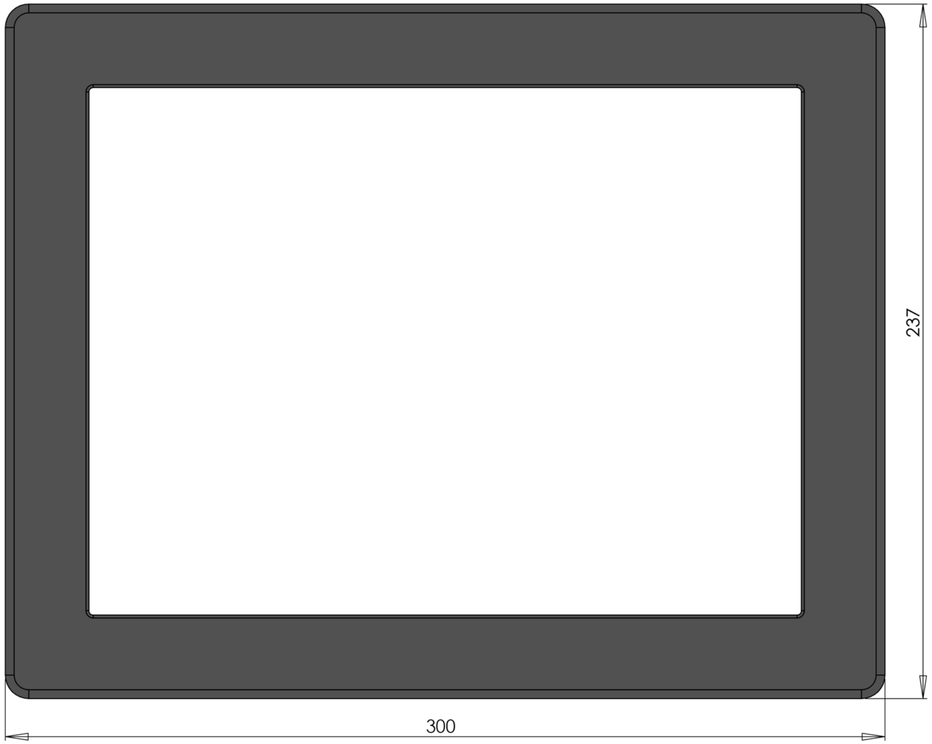

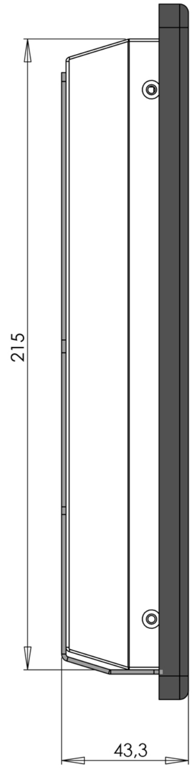

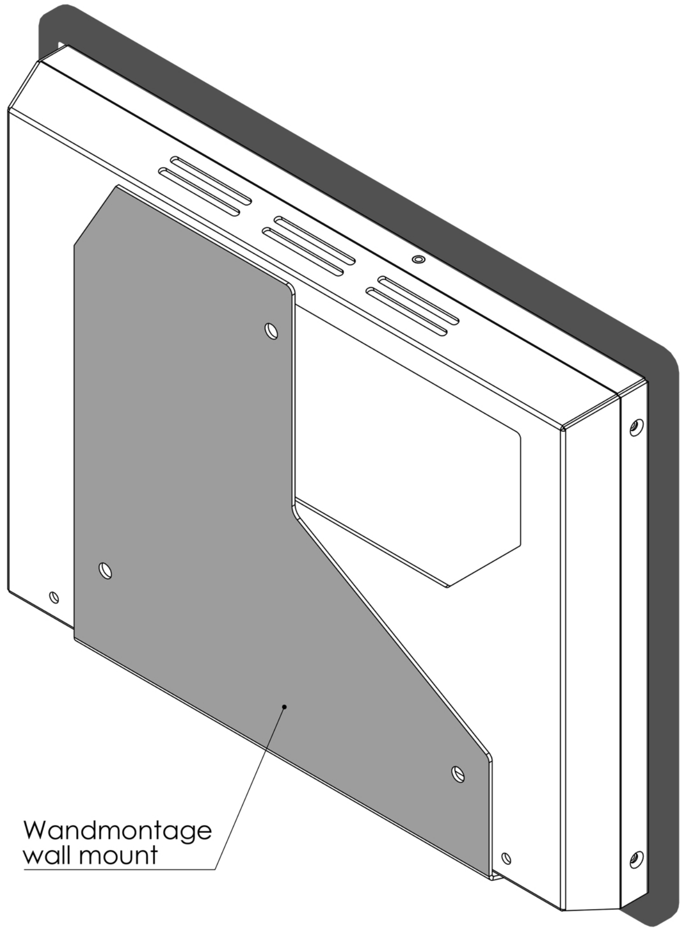

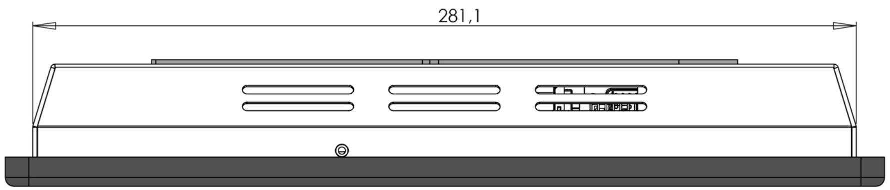

Projekt			Anzahl X	VICOM Visual Communication
NAME	SIGNATURE	DATE		TITLE: Bezeichnung
			MATERIAL: ------	DWG NO. TR_ELE12-17-Monitor asm-A
			WEIGHT: --------	SHEET 1 OF 1